BlueSky

20/410 Black Smoothwall Treatment Pump c/w O Cap 120 FBOG

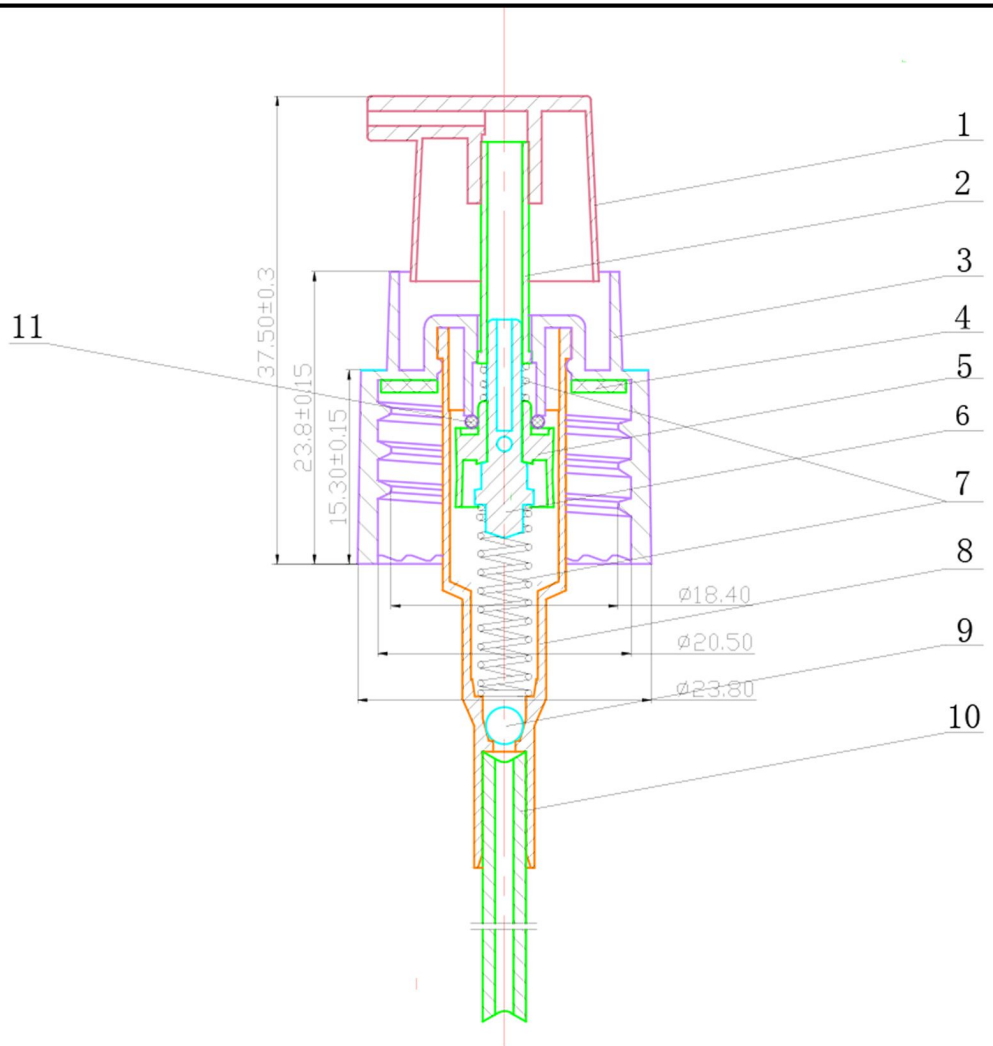

No	Name	Material	Quantity
11	Ring	RUBBER	1
10	Dip tube	HDPE	1
9	Ball	GLASS	1
8	Housing	PP	1
7	Spring	SS304	1
6	Stem insert	LDPE	1
5	Lower piston	LDPE	1
4	Gasket	PE	1
3	Closure	PP	1
2	Up piston	LDPE	1
1	Actuator	PP	1

BlueSky
Horizon House
Estate Road Five
Grimsby
DN31 2TG

blueskysolutionsuk.com
+44 (0)1472 240940
sales@blueskysolutionsuk.com

BlueSky (UK) Limited, Registered in England, No 07763362
Horizon House, Estate Road Five, Grimsby, United Kingdom, DN31 2TG